Very intense and uniform illuminated area
Full range of colors: from UV to IR, white
Long lifetime and few maintenances
Compatible with most objectives (C-Mount)
No speckle

		PSV (Passive cooling)
Electronics	Connectors	M12, 5 Contacts (with LED driver)
	Power supply	24V DC
	Illumination mode	Continuous or strobe mode
	Power consumption	90W (peak)
Optics	Wavelength	Various wavelengths (from UV to IR, white)
	Projected pattern	Random Cloud of Dots with a density of 50%
Mechanics	Weight	400 g
	Width x length	79.1 mm x 129.6 mm (without the objective)
	Objective adjustment	C-mount adaptor on the projector
	Fastener	8 x M5 holes on the sides of the device
	Material	Device body: Aluminum alloy
Environment	Working temperature	0°C to 40°C
	IP code	IP54

NANOXEED
株式会社 ナノシード
〒182-0034 東京都調布市下石原3-2-7 平田ビル 2階 size S N5
info@nanoxeed.co.jp 03-5953-8810 03-4332-2352

Part Number

Reference:
EFFI-LASE-NERIAN-YYY

YYY: Wavelength (nm) / Color (*other wavelengths available on demand*)

• – –	• l e	• reen	• e	•	○ Wh te ( )

Type of Mask
Stereovision
Cloud of dots density 50% Surface (mm²) 12,8x9,6 

Electronical considerations

Contact arrangement

u l 2 l

CONVENTION CABLE M12

Pin number	Cable color	Contact arrangement	Designation	Details	Max Power Consumption
1	Brown	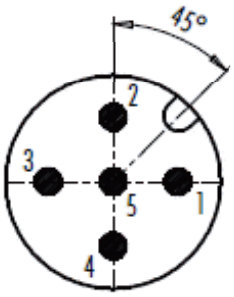 M12 male connector	+24V	+24V	2,6A@24V (strobe) 1,65A@24V (continuous)
2	White		NPN	NPN [triggered on falling edge] - Max 24V (Light ON if V_{NPN} < 1.5 V / OFF if V_{NPN} > 3V)	12mA@3,5V 3mA@5V 0,5mA@10V 0,15mA@24V
3	Blue		GND	GND	/
4	Black		PNP	PNP [triggered on rising edge] - Max 24V (Light ON if V_{PNP} > 4.5 V / OFF if V_{PNP} < 3V)	12mA@24V 3mA@10V 0,5mA@5V 0,15mA@3,5V
5	Grey		AIC*	AIC (Analog Intensity control) * - Max 24V	0,1mA@0V 0,3mA@5V 1mA@10V 3mA@24V

**If the AIC is not connected, the light will light on at 100% as if V_{AIC}=24V. If you don't need to adjust light level do not connect se this l*

株式会社 ナノシード
〒182-0034 東京都調布市下石原3-2-7 平田ビル 2階 size S N5
info@nanoxeed.co.jp 03-5953-8810 03-4332-2352

Strobe mode

The LED driver inside the product is set to automatically pulse the LED.
If you trigger light for a short pulse (< 100 µs), light is pulsed (LED are driven at 2A).
If your pulse is longer, light automatically decreases LED current to protect LED against failure.

To protect LED, the product will enter in protection mode (Light is OFF for 2 second) if the duty cycle is superior to 0.3. Every 2 seconds, the product will check if duty cycle is correct to restart.

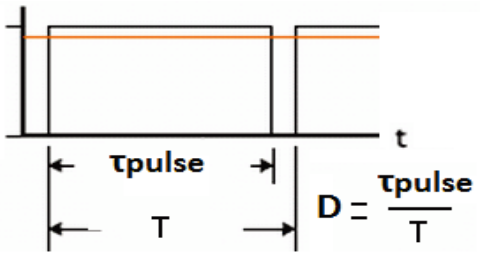

If D=Duty cycle (ON $_{TIME}$ / (ON $_{TIME}$ + OFF $_{TIME}$)) > 0.3 → Light shutdowns for 2 seconds

Continuous mode

If you set trigger NPN continuously ON (or PNP), the light will run continuously with a 700 mA LED current.

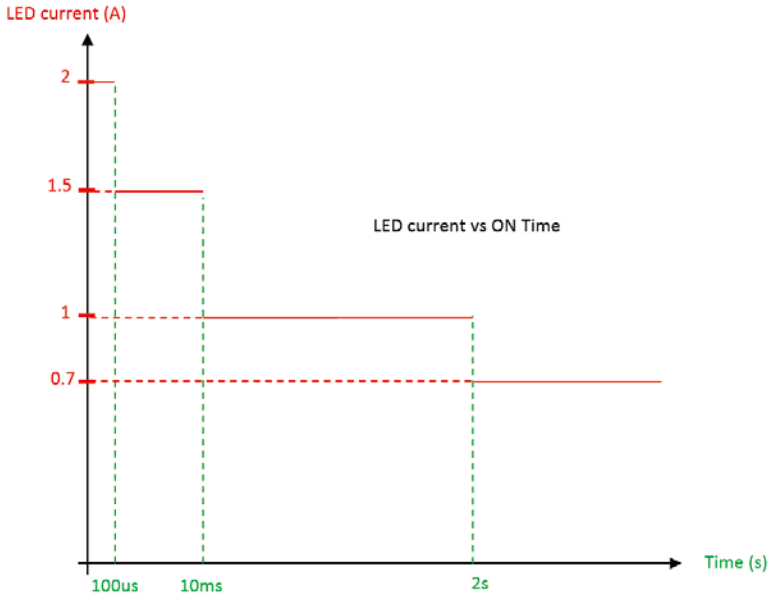

Power consumption of the EFFI-Lase-Nerian	
Power consumption – ontinuous	Power consumption –

Analog Intensity Control (AIC)

By adjusting the analog tension, light intensity can be controlled from 10% to 100%.
If the Input AIC is not connected, the EFFI-Lase-Nerian will act as if AIC was set at 24V.

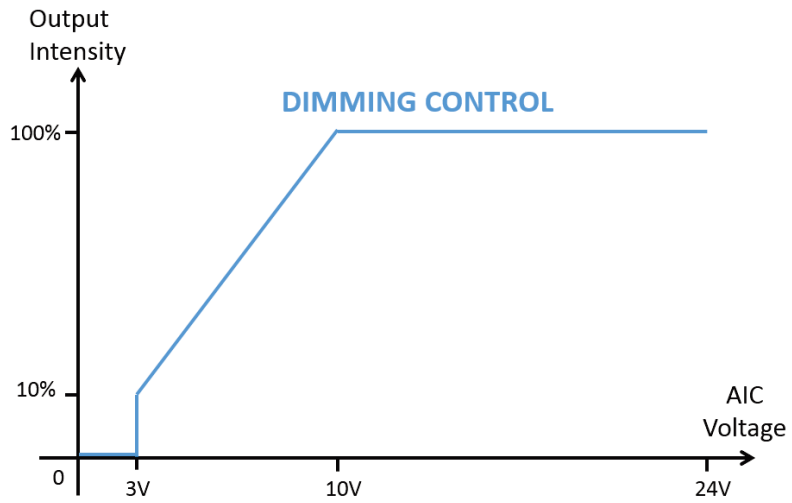

- 0 – V LED FF
- – 10V: ≈10% to 100% light intensity
- 10 - 24V LED N 100%
- 100% if not connected

Temperature protection

The EFFI-Lase-Nerian is protected against over warming.
If LED temperature exceeds 80°, the light is automatically switched off. The EFFI-Lase-Nerian will restart itself as soon as temperature is below 70°C.

Optical considerations

Any C-mount objective (accessory) can be mounted on the EFFI-Lase-Nerian. Objectives are not sold with EFFI-Lase-Nerian.

To guarantee the quality of the projector, the pattern is directly mounted in the projector body. However, the pattern can be observed through the aperture of the projector. Avoid any sharp contact with the mask: this one is sensitive and can easily be damaged.

Objective selection

EFFILUX recommends using one of the following objectives with the EFFI-Lase-Nerian (2/3” 1.5MP and 1” 1.5MP :

Focal length (mm)	9	12.5	16	25	35	50	75
Iris Range	F1.4 – F16				F1.6 – F22	F2.3 – F22	F2. – F22
Angle of View (HxV)	52°06′ x 40°16′	38°47′ x 29°35′	30°45′ x 23° 18′	19° 58′ x 15° 02′	14° 20′ x 10° 46′	10° 03′ x 07° 33′	6° 43′ x 5° 02′
Filter thread	M27 x 0.5 mm	M25.5 x 0.5 mm					M30.5 x 0.5 mm
L x Ø	35 x 29.5 mm	29.5 x 29.5 mm	29.5 x 29.5 mm	29.5 x 29.5 mm	29.5 x 29.5 mm	29.5 x 29.5 mm	48 x 29.5 mm
Mechanical characteristics	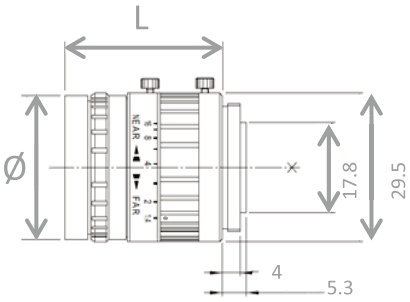						

	OBJ-1-F12.5 CF12.5HA-1	**OBJ-1-F16 CF16HA-1**	**OBJ-1-F25 CF25HA-1**	**OBJ-1-F35 CF35HA-1**	**OBJ-1-F50 CF50HA-1**	**OBJ-1-F75 CF75HA-1**
Focal length (mm)	12.5	16	25	35	50	75
Iris Range	F1.4 – F22				F1.8 – F22	
Angle of View (HxV)	45° 13′ x 42° 01′	43° 36′ x 33° 24′	28° 43′ x 21° 44′	20° 43′ x 15° 37′	14° 35′ 10° 58′	9° 45′ x 7° 19′
Filter thread	M49 x 0.75 mm					
L x Ø	68.5 x 51 mm	70.5 x 51 mm	75.5 x 51 mm	48.5 x 51 mm	55.5 x 51 mm	76 x 51 mm
Mechanical characteristics	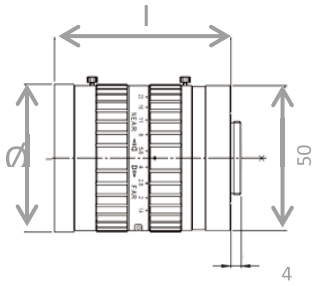					

NANOXEED
株式会社 ナノシード
〒182-0034 東京都調布市下石原3-2-7 平田ビル 2階 size S N5
info@nanoxeed.co.jp 03-5953-8810 03-4332-2352

Objective	***Pattern dimensions HxW (cm)*** *Dimensions of a 12.8x9.6mm cloud of dots pattern*			
	WD = 30cm	*WD = 50cm*	*WD = 80cm*	*WD = 100cm*
f = 12.5 mm	32 x 23	51 x 37	82 x 59	102 x 73
f = 16 mm	25 x 19	41 x 31	66 x 49	82 x 61
f = 35 mm	11 x 8	18 x 14	29 x 22	36 x 27
f = 50 mm	n.a	12 x 9	20 x 15	25 X 19
f = 75 mm	n.a	n.a	13 x 10	16 x 12

株式会社 ナノシード
〒182-0034 東京都調布市下石原3-2-7 平田ビル 2階 size S N5
info@nanoxeed.co.jp 03-5953-8810 03-4332-2352

Mechanical considerations (Dimensions in mm)

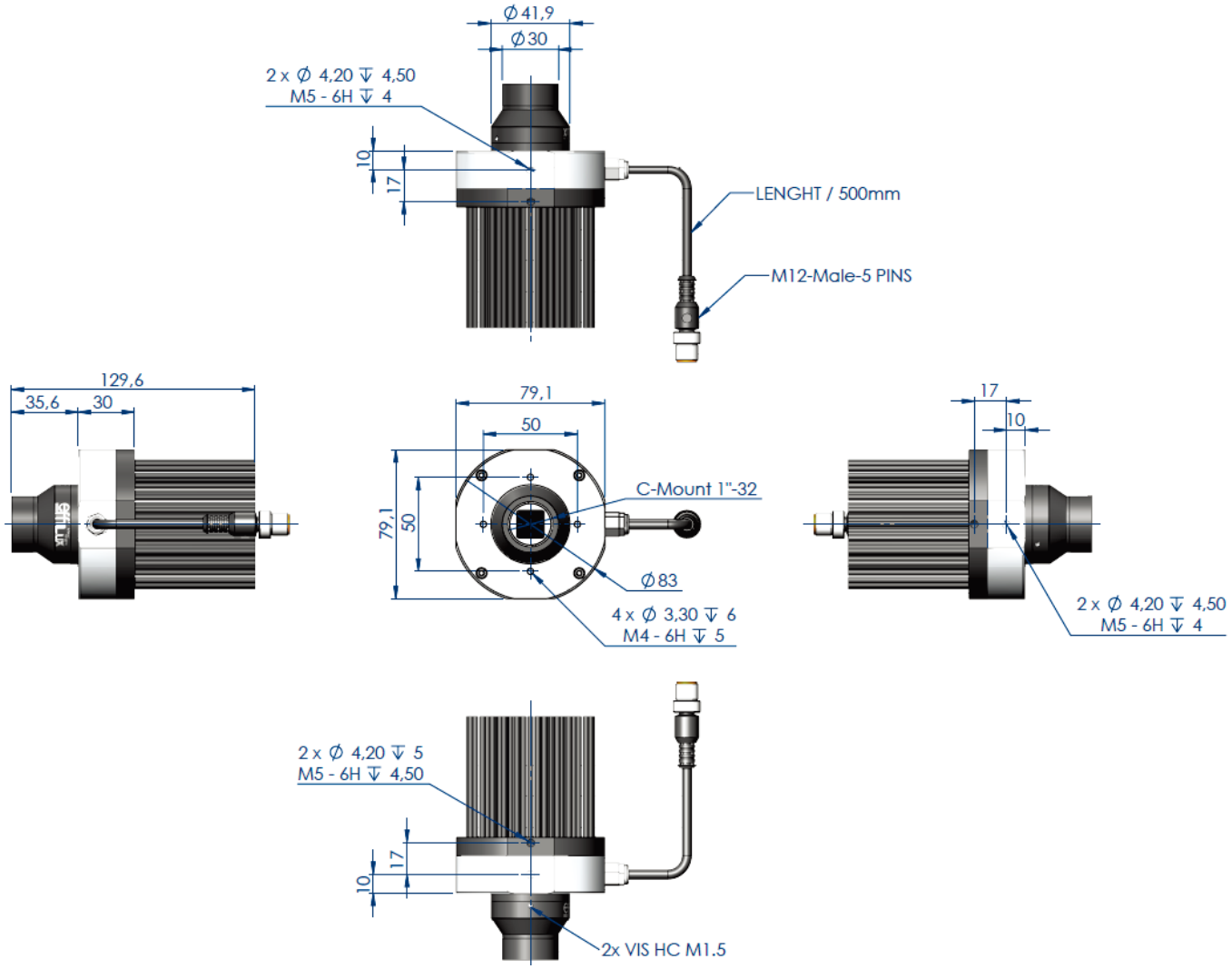

Quick Start

1 Ready

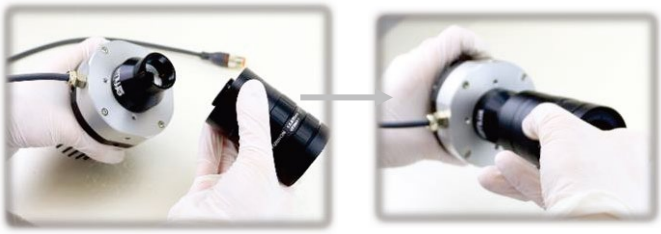

2 Screw the objective

*The objective **is not provided** with the EFFI-LASE.

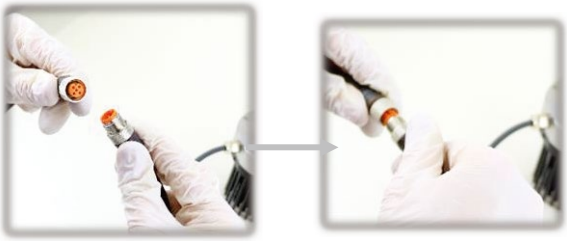

3 Plug the M12 connector*

*You can plug the M12 directly to your own power supply or to the EFFILUX power supply.

1	+24V
2	NPN
3	GND
4	PNP
5	AIC

4 Turn ON and use the product

NANOXEED
株式会社 ナノシード
〒182-0034 東京都調布市下石原3-2-7 平田ビル 2階 size S N5
info@nanoxeed.co.jp 03-5953-8810 03-4332-2352